ACE LEDS CONSTANT POWER

Input Voltage 120-277 V
Output Power 14 W (Constant)

ACE-G14LN1555CP Linear Emergency LED Driver

Primary Specifications:

Output Power Max	Input Power	Input Current Max	Emergency Operating Time	Battery	Input Voltage	Output Voltage	Ambient Operating Temperature	UL Listed for US and Canada
14 W	5 W	70 mA	90 min.	$LiFePO_4$ 24 Hour recharge 7 to 10 year Life expectancy	120-277 Vac 50/60Hz	15-55 V[1]	0 ˚C through 55 ˚C	UL and cUL (UL924) Emergency LED Driver

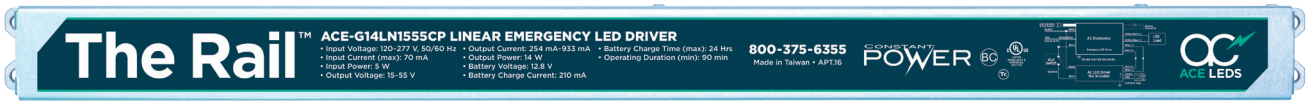

Description:

The ***ACE-G14LN1555CP*** from AC Electronics is a UL Listed Linear Emergency LED Driver that enables the same LED fixture to be used for both normal and emergency operation. The ***ACE-G14LN1555CP*** contains a $LiFePO_4$ battery, a high-efficiency battery charger, control circuitry, and high-efficiency power converter circuits, in a single metal enclosure. In the event of a normal power failure, the ***ACE-G14LN1555CP*** switches to emergency-mode and operates the fixture's LED array or module for 90 minutes at a constant power of 14 W. When normal power returns, the ***ACE-G14LN1555CP*** returns to normal-mode. The ***ACE-G14LN1555CP*** can be used in switched or unswitched fixture applications. The ***ACE-G14LN1555CP*** can drive any LED array or module in emergency-mode with a voltage range of 15-55 Vdc and that can operate at a current range of 254 mA to 933 mA.

Additional Specifications:

Normal (ac) driver maximum output current:.....5 A[2]
Output current range:.....254 mA to 933 mA[3]
Surge protection:.....3 kVp
Maximum case temperature Tc:.....66 °C
Nominal battery voltage:.....12.8 V
Battery charge current:.....210 mA
Metal enclosure IP rating:.....IP30
Weight.....4 lb
Dimensions:.....16.6 in L x 1.18 in W x 1.0 in H

[1]The emergency-mode output voltage operating range is 15 - 55 V. The absolute maximum output voltage is 60 V to comply with class 2 regulations.

[2]The Normal (ac) Driver maximum output current is the maximum current allowed to pass through the ***ACE-G14LN1555CP*** circuitry in Normal-mode.

[3]The emergency-mode output current is automatically adjusted to maintain a constant output power across the output voltage range.

*Warranty: 5 years based on a maximum case temperature of ≤ 60 °C, 3 years warranty based on a maximum case temperature of ≤ 66 °C

5-Year USA-Backed Warranty*
See complete AC Warranty information for details

Safety and Regulatory Compliance:

- UL and cUL Listed as an Linear Emergency LED Driver (UL924)
- UL Listed for both field and factory installation
- UL & cUL Class 2 output (UL1310 compliant)
- CEC Title 20 compliant: Certified in CA Title 20 Appliance Efficiency Database – Battery Charger
- EMI: Complies to FCC commercial limits
- RoHS compliant

Features, Benefits, and Applications:

- Constant output power: Maintains constant emergency light levels over the full 90-minute runtime and over the output voltage range.
- Self-sensing output voltage: Automatically adjusts over the 15-55 V range to maintain constant power within the class 2 voltage range.
- Includes input over voltage surge protection, output short circuit, open circuit, and over–voltage protection, as well as over-temperature protection for improved reliability.
- Two-wire universal input: Reduces wiring errors and reduces installation time and complexity.
- Includes a miniature illuminated test switch status indicator: Enables mounting in small spaces.
- Suitable for indoor and damp locations.
- Compatible with a variety of LED fixtures, such as emergency-only fixtures, as well as new and existing fixtures.

For questions or to place an order contact us at oemsales@aceleds.com or 800-375-6355
or your local WPG American Sales representative at inquiry@wpgamericas.com or 888-WPG8881

©2022 18Aug2022

Data is based upon tests performed by ACE LEDS in a controlled environment and representative performance. Actual performance can vary depending on operating conditions. Specifications are subject to change without notice. All specifications are nominal unless otherwise noted.

ACE LEDS — ACE-G14LN1555CP Linear Emergency LED Driver

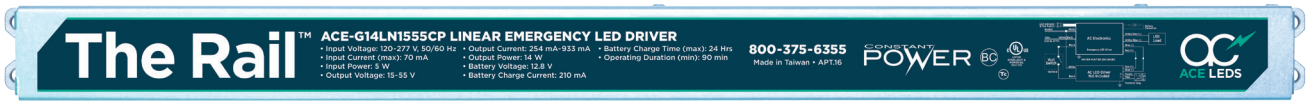

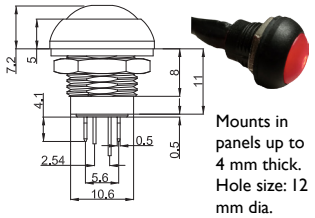

Mounts in panels up to 4 mm thick. Hole size: 12 mm dia.

miniature illuminated test switch

Lead Lengths					
Black	5.9"	Red (F)	5.9"		
White	5.9"	Blue (F)	5.9"	Test Switch/	7.08"/
Yellow/Black	5.9"	Red (M)	5.9"	LED Indicator	23.62"
		Blue (M)	5.9"	Battery Connector	33.07"

Dimensions			
Length	16.6"	Height	1.0"
Width	1.18"	Mounting Length	16.3"

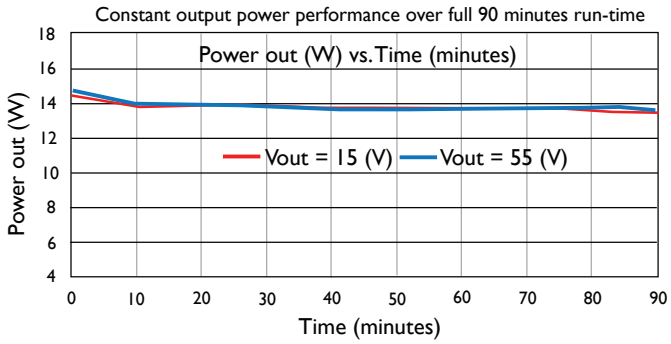

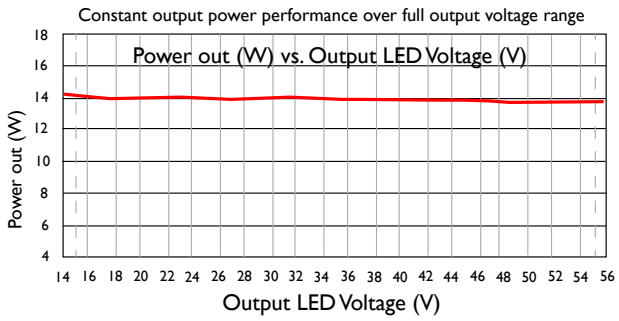

INSTALLATION:

The ***ACE-G14LN1555CP*** Linear Emergency LED Driver may be used with either a switched or unswitched fixture. If used with a switched fixture, an unswitched (constant hot) lead must be connected to this Linear Emergency LED Driver to allow the battery to charge properly and to maintain a charge when normal AC power is available. The Linear Emergency LED Driver must be fed from the same branch circuit as the normal AC LED driver (if used). This Linear Emergency LED Driver must not be installed with fixtures where the ambient temperature may fall below 0 °C (32 °F), and it must be installed inside an electrical enclosure. The ***ACE-G14LN1555CP*** Linear Emergency LED Driver comes in a single metal enclosure with a separate miniature illuminated test switch status indicator. This Linear Emergency LED Driver is suitable for installation in sealed and gasketed fixtures. The maximum remote mounting distance to the LEDs is 18 feet. The Linear Emergency LED Driver metal case should be grounded. 18 AWG 600 V, 105 °C tinned stranded copper lead-wires are required for installation.

Specifications:

Emergency lighting shall be provided by using the AC Electronics ***ACE-G14LN1555CP*** Linear Emergency LED Driver with a compatible LED fixture. The ***ACE-G14LN1555CP*** shall contain a $LiFePO_4$ battery with a nominal voltage of 12.8 V and 3300 mAh capacity, a high-efficiency battery charger, control circuitry, a high-efficiency two-wire universal input converter (120 through 277 Vac), high-efficiency output LED driver with soft-switching technology to prevent noise to protect LED modules, all contained in a single metal enclosure. A separate miniature illuminated test switch status indicator with installation hardware shall be provided for the purposes of performing periodic testing and indicate status change of the battery and battery-charger. The ***ACE-G14LN1555CP*** Linear Emergency LED Driver shall be capable of delivering a constant power of 14 W to an LED load of 15 – 55 V for a minimum of 90 minutes. The ***ACE-G14LN1555CP*** Linear Emergency LED Driver shall have a maximum of 5 W input power and shall comply with emergency standards established by the current NEC and shall meet CEC Title 20 (California Energy Commission) efficiency standards. The ***ACE-G14LN1555CP*** Linear Emergency LED Driver shall comply with part 15 of the FCC Rules. The ***ACE-G14LN1555CP*** Linear Emergency LED Driver shall be UL Listed for field or factory installation. The ***ACE-G14LN1555CP*** is suitable for indoor and damp locations.

For questions or to place an order contact us at oemsales@aceleds.com or 800-375-6355
or your local WPG American Sales representative at inquiry@wpgamericas.com or 888-WPG8881

©2022 18Aug2022

Data is based upon tests performed by ACE LEDS in a controlled environment and representative performance. Actual performance can vary depending on operating conditions. Specifications are subject to change without notice. All specifications are nominal unless otherwise noted.

ACE LEDS — ACE-G14LN1555CP Linear Emergency LED Driver

STYLE 1
(USE IF AN EXTERNAL SWITCHED LINE IS NOT AVAILABLE)

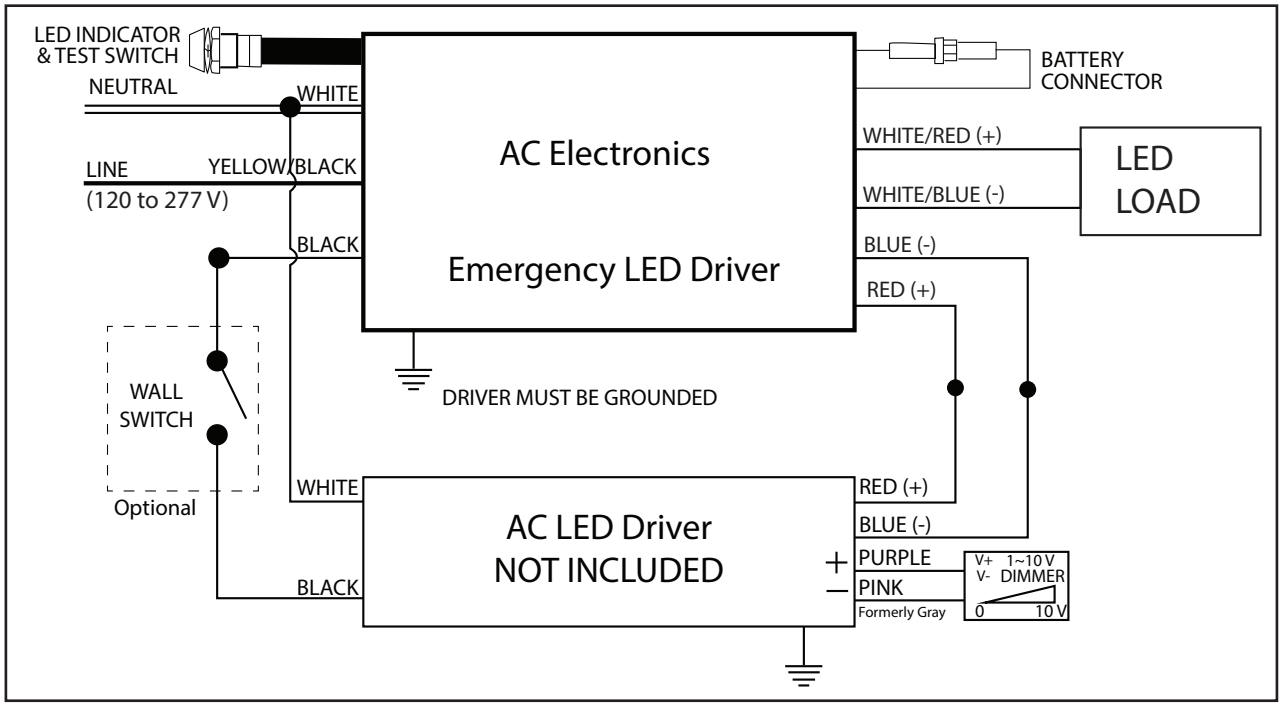

STYLE 2
(USE IF AN EXTERNAL SWITCHED LINE IS AVAILABLE)

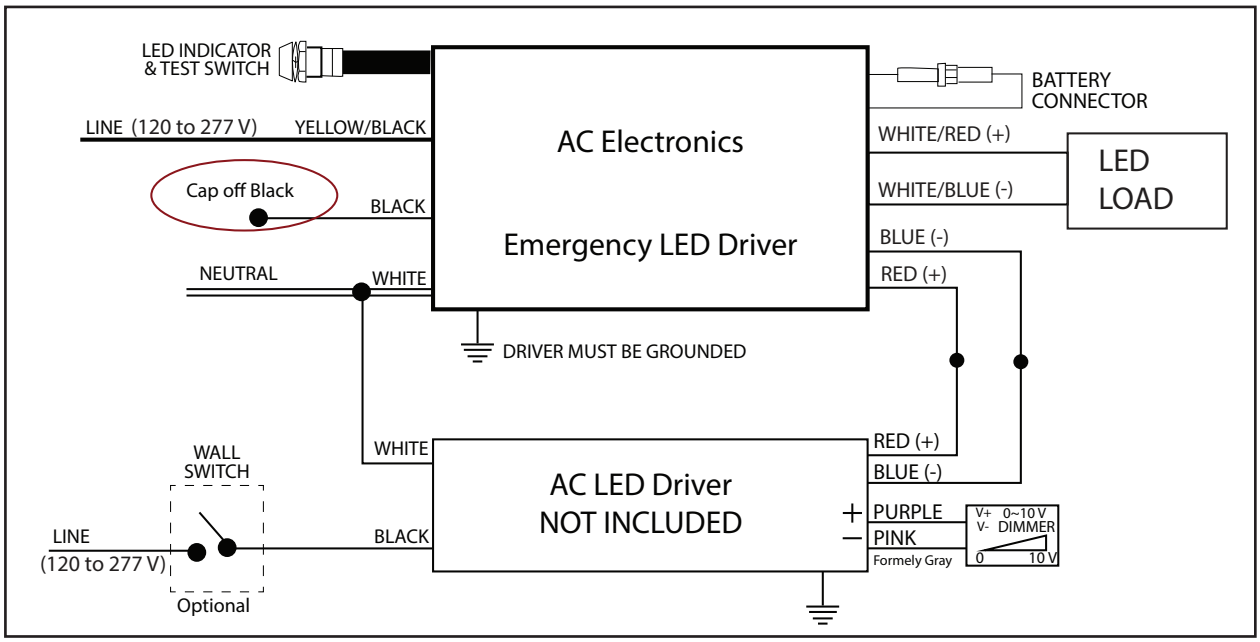

***AC Electronics/AC LED Power Designs warrants to the purchaser that each Linear Emergency LED Driver will be free from defects in material or workmanship for a period of 5 years when operated at max case temp of up to <60°C when properly installed and under normal conditions of use. See aceleds.com for complete warranty policy.**

For questions or to place an order contact us at oemsales@aceleds.com or 800-375-6355
or your local WPG American Sales representative at inquiry@wpgamericas.com or 888-WPG8881

©2022 18Aug2022

Data is based upon tests performed by ACE LEDS in a controlled environment and representative performance. Actual performance can vary depending on operating conditions. Specifications are subject to change without notice. All specifications are nominal unless otherwise noted.